| LTR | Zone | REVISION RECORD / Description | DWN/CHK | DATE |
|---|---|---|---|---|
| 1 | | New Release | KC | |
| 2 | Zone 1 | Added #5 PE Bag | KC | Oct/26/05 |

DRAWING NUMBER
JAB_1M574B-S0B

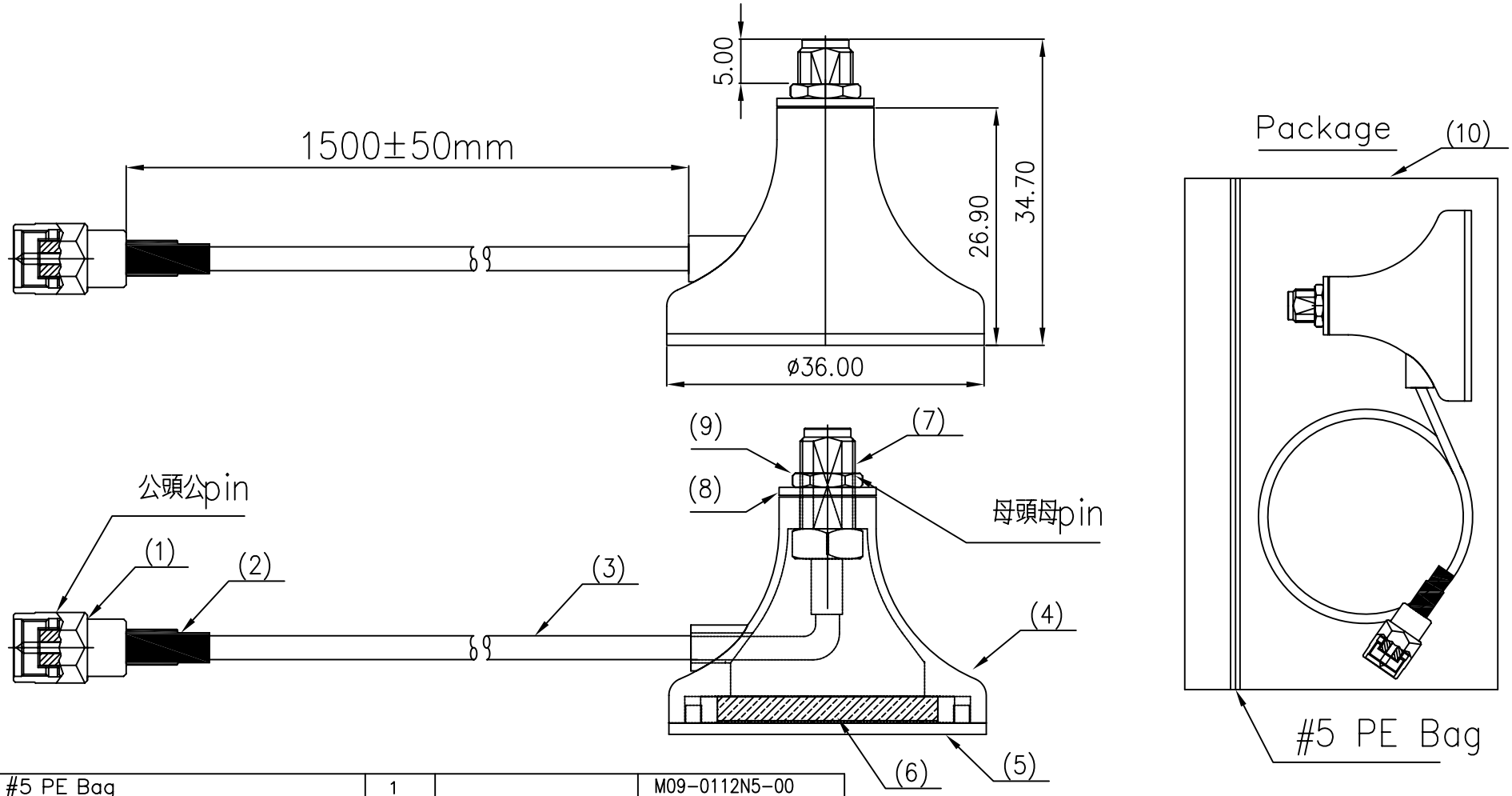


| NO | DESCRIPTION | Q'ty | MATERIAL | Part Number |
|---|---|---|---|---|
| 10 | Bag #5 PE Bag | 1 | | M09-0112N5-00 |
| 9 | Nut Gold Plated | 1 | Brass | |
| 8 | TOOTH WASHER Gold Plated | 1 | Brass | |
| 7 | CONN : SMA Jack Gold | 1 | Brass | M01-051010-02 |
| 6 | Magnetic: N38 Magnetic ø25 | 1 | | M07-25X03N-40 |
| 5 | Plastic Cap for Base Black | 1 | ABS | M04-3N0230-04 |
| 4 | Plastic Base Black | 1 | ABS | M04-3N0230-00 |
| 3 | CABLE : RG174/U BLACK | 1 | | M02-RG174U-BL |
| 2 | TUBE : HEAT SHRINK TUBE | 1 | | M05-035003-BL |
| 1 | CONN : SMA PLUG Gold | 1 | Brass | M01-053101-MM |

| | |
|---|---|
| UNIT *mm* | APVD |
| MATERIAL SEE NOTE | CHK |
| FINISH SEE NOTE | DWN Kaven |

Ant Base SMA J-RG174 SMA P L1500mm+Magnetic

JAB_1M574B-S0B